CHARGE NUMBER:	0108
PROGRAM TITLE:	Mechanism for Smoke Formation
PERIOD COVERED:	March 1-31, 1977
PROJECT LEADER:	R. H. Newman
DATE OF REPORT:	April 6, 1977

Two special reports were written entitled "The Determination of the Propellants and Residue Combustion Products in Three Samples of Silicone Spray Lubricant" and "Computerized GC/MS Analysis of Volatile Products from E3/2-UO/UO Weigh Belt Combustion".

Direct introduction analysis MS for a dihydropyrazine derivative was performed. The analysis confirmed the presence of the parent compound, MW 354, and a small amount of material that is two mass units higher in molecular weight. Also, the presence of a peak at m/e 246 at a high probe temperature indicates the thermal decomposition of the starting material to form diphenyl-methylpyrazine.

Attempts were made to identify the volatile TPM decomposition products of Altosid found in mainstream smoke. It is known to give approximately 3% decomposition products from radioactivity determinations. 1R1 cigarettes without and with 10 ppm added Altosid were smoked, TPM collected and approximately 1/5 of the pad swept at 175°C into a GC column. The parent Altosid, estimated to be 720 ng, was easily measured; however, no significant change in the total ion current at retention times corresponding to the breakdown products was observed. There are four known areas containing activity. If they are equal in concentration, then they represent <6ppb in each component. It is not surprising that they were not observed over the normal volatile TPM. In order to detect and identify these components prior knowledge as to their structure will have to be obtained.[1,2]

A device for measuring the chest expansion of smoking subjects was constructed. The schematic below shows how the device will work.

2022151829

Source: https://www.industrydocuments.ucsf.edu/docs/mxxm0000

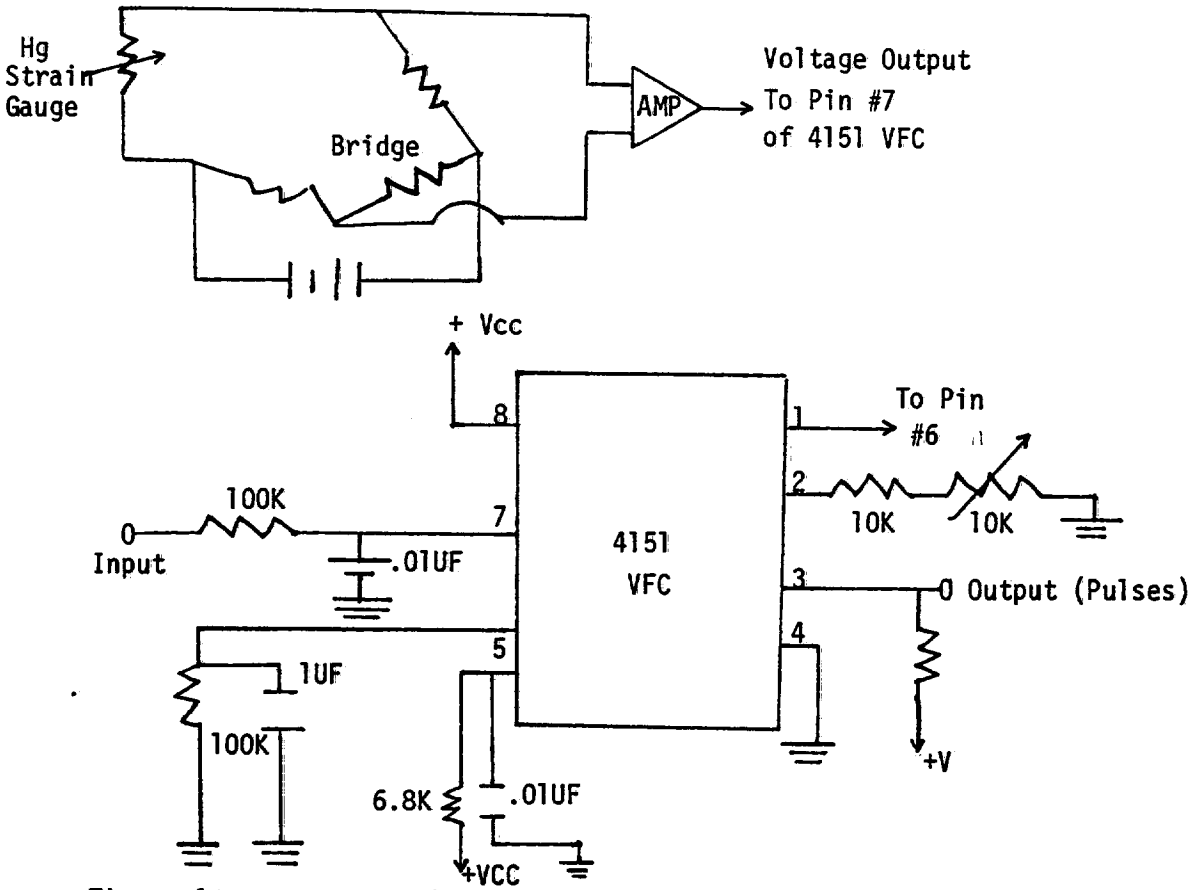

The voltage output is proportional to the resistance of the Hg strain gauge which is changed by subjects' breathing. The 4151 VFC output frequency of pulses is proportional to the applied input voltages.[3]

One major peak having a molecular weight of 96 has not been identified from the GC/MS pyrolysis of 1',1'-dimethylallyl 2,3,4,6-tetra-o-acetyl-β-D-glucopyranoside. The parent compound was pyrolyzed and the unknown peak trapped and submitted for IR and NMR analysis. IR indicated the presence of an unsaturated α-lactone with no methyl groups. The analysis by H'-NMR indicated only vinyl and vinylidene protons. Based on this information there are two possibilities (A and B) for the structure of this compound.

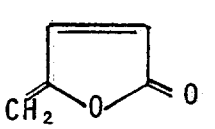

A

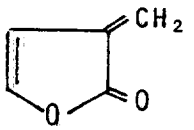

B

2022151830

Source: https://www.industrydocuments.ucsf.edu/docs/mxxm0000

Methyl 2,3,4,6-tetra-O-t-butylacetyl-α-D-glucopyranoside was pyrolyzed over a range of temperatures and the t-butyl-acetic acid released measured. The results are given below:

T (°C)	µg Acid/mg Sample
400	91
450	141
500	389
547	319
600	148

The β-methylvaleryl glucopyranoside was also pyrolyzed and the β-methylvaleric acid which was released was measured. The results are shown below:

T (°C)	µg Acid/mg Sample
300	2
350	13
400	40
450	70
500	138
550	122
590	89

REFERENCES

1. Kornfeld, R., 7033
2. Greene, F., 6798
3. Jones, W., 6965
4. Rundberg, E., 7046, 7130

/slb

2022151831

Source: https://www.industrydocuments.ucsf.edu/docs/mxxm0000